SPECIFICATIONS

OCCDSLP & OCCDSNG

Kleenmaid Professional Series Outdoor Cooking Centre

Kleenmaid's outdoor cooking centre now allows you to sear, steam, sauté, stir-fry, deep fry, roast, bake, boil and grill outdoors.

The division between indoors and out becomes blurred and the only limit is your imagination.

Why cook indoors when everything can be prepared in the great outdoors!

For your nearest store call 13 13 08
www.kleenmaid.com

Kleenmaid
The best you can own.

Burners:
Professional Crossfire Burners (Front to back)

Performance:
60mj total performance

Roasting hood:
Double walled hood construction with insulation

Cooking grids:
Porcelain coated cast-iron

Pedestal:
Slide-out gas cylinder tray and storage cupboards (included)

Optional:
240V stainless steel rotisserie-light kit (OCCDSRT)
Premium quality cover (OCCDSCV)
Enamelled cast-iron hotplate (OCCHP)

SPECIFICATIONS

OCCDSLP & OCCDSNG

Kleenmaid Professional Series Outdoor Cooking Centre

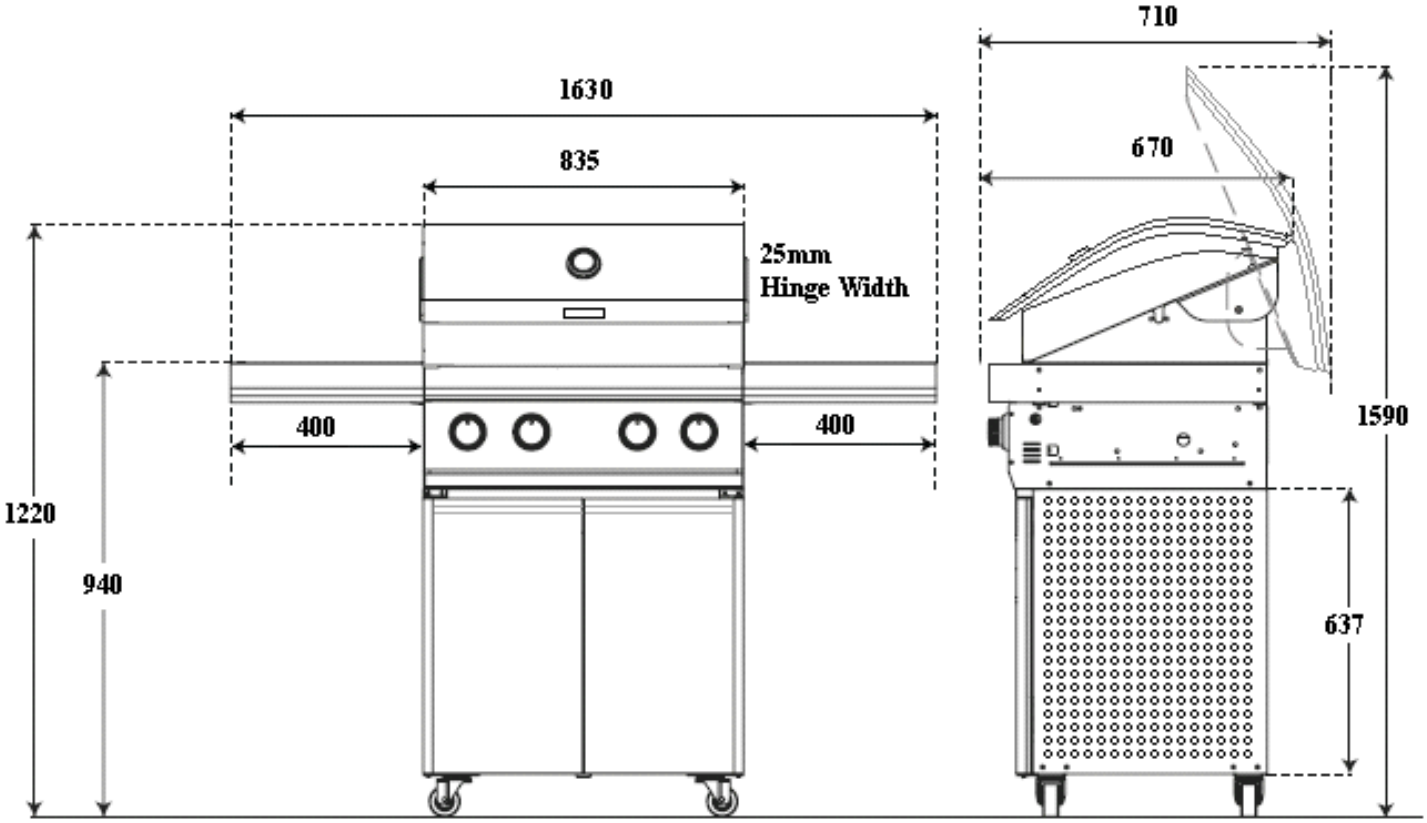

Kleenmaid Professional Series - Outdoor Cooking Centres					
Model No.	AGA Approval	Gas	Injector (mm)	Total Input (MJ/h)	Pressure kPa
OCCDSLP	7336	LPG	1.09	60.0	2.75 kPa
OCCDSNG	7336	NG	1.80	54.0	1.00 kPa

Kleenmaid
The best you can own.

For your nearest store call 13 13 08
www.kleenmaid.com

SPECIFICATIONS

OCCDSLP & OCCDSNG

Kleenmaid Professional Series Outdoor Cooking Centre

The following information is designed to clarify the requlations and installation requirements for outdoor cooking centres. The information is specifically relevent to the state of WA, however, they act as a good guideline for all states to follow. Please ensure that you read the information carefully so that you can inform customers of the correct usage for their outdoor cooking centres.

Please Note that the outdoor cooking centres have been approved as an *OUTDOOR* appliance. Barbecues that are designed and approved for the outdoor use *MUST NOT* be installed indoors. Installation and operation of outdoor barbeques must comply with AS 5601/AG 601 and the manufacturer's instructions

WHAT IS AN OUTDOOR AREA OR OUTDOOR SPACE?

While definition of an outdoor space is not currently defined in AS 5601/AG 601, one of the following configurations is considered to meet the definition of outdoor pace:

- An area with walls on all sides but with no overhead cover, or

- With in a partial enclosure that includes an overhead cover and no more than two sidewalls. These sidewalls may be parllel or at right angles to each other. Please refer to the below diagrams to the right.

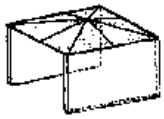

Parallel Walls

Right Angle Walls

- Or within a partial enclosure that includes an overhead cover and three sidewalls, and as long as the open side has a minimum area of 25% of the total wall area and the remining wall area has 30% or more unrestricted opening. Please refer to the diagrams to the right.

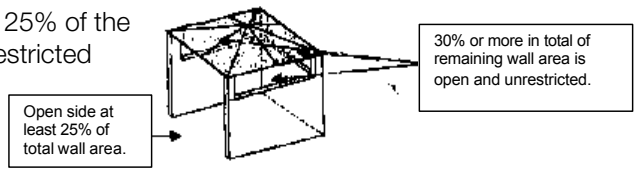

INSTALLATION REQUIREMENTS

A minimum clearance of 1500mm between the cooking surface and the underside of the ceiling must be maintained.

Clearance from and open grid BBQ (residential) to overhead grese filter (rangehood) must be 1200mm

In WA an installer will not connect an outdoor cooking centre to a fixed connection (natural gas) for indoor usage, however, if the customer wants a portable connection to gas bottle then there is nothing really stopping them from doing so because the user can use the appliance outdoors.

Please ensure that you make the customer fully aware of the proper usage and installation of their outdoor cooking centre by informing them that it must be installed outdoors or in a very well ventilated space. We do not want to be accountable for any cases of carbon monoxide poisoning or any other gas accidents.

*Technical specifications and product sizes can be varied by Manufacturer without notice. Any cut-outs for appliances should only be by physical measurements. Drawings are not to scale. All information supplied is for general reference purposes only and is on the understanding that Kleenmaid Pty Ltd will not be liable for any loss, liability or damage whatsoever arising as a result of reliance of such information.

Kleenmaid
The best you can own.

For your nearest store call 13 13 08
www.kleenmaid.com