Slide-out Rangehood

Style: Slide-out
Colour: Stainless steel & glass
Width: 900mm
Operation: 3 speed illuminated soft push buttons
Lighting: 2 x 20w Halogen globes
Maximum Airflow Capacity: 1000 m^3/h

Good looking and efficient – the perfect combination! The new series of designer rangehoods from Kleenmaid combine stunning good looks with outstanding design, to provide the perfect finishing touch to any kitchen.

*Technical Specifications and product sizes can be varied by Manufacturer without notice. Any cut-outs for appliances should only be by physical measurements. Drawings are not to scale. All information supplied is for general reference purposes only and is on the understanding that Kleenmaid Pty Ltd will not be liable for any loss, liability or damage whatsoever arising as a result of reliance of such information.

10

10 Year Parts & Labour Warranty*

For your nearest store call 13 13 08
www.kleenmaid.com.au

EXCLUSIVE TO
Kleenmaid
The best you can own.

Slide-out Rangehood

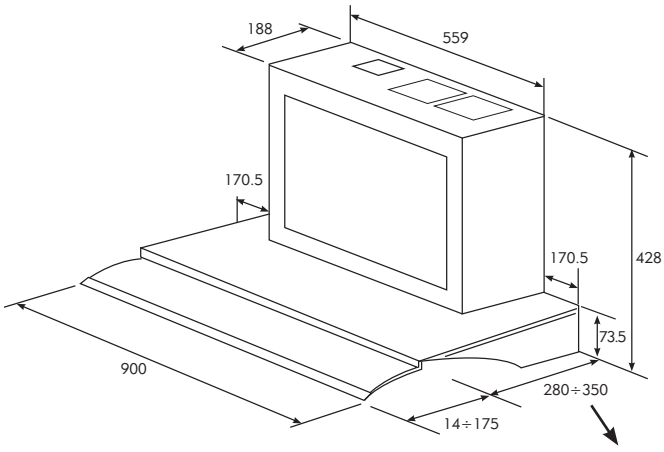

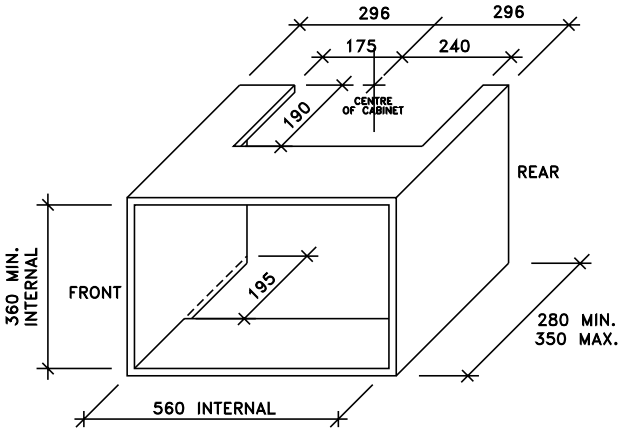

Adjustable sliding assembly: distance from abutment to fairing at rear

Important Notes on Installation:

- Photograph on page 1 is a Surface Mounted Installation where sliding assembly unit sits below bottom line of cupboards
- Semi-Recessed Installations
  - this is where the rear of the unit is semi-recessed & flush with bottom of cupboards and sliding assembly recesses into front of cupboards
  - in these cases ensure that front internal cabinetry is 2mm wider than sliding glass assembly:
    - RH60 = 602mm
    - RH90 = 902mm
- Two different wall spacing brackets (fairing) can be used in installation – if total depth of cabinetry is less than 315mm, fit 37mm wide fairing if total depth of cabinetry is more than 315mm, fit 75mm wide fairing
- When screwing cabinet base to cabinetry always screw from beneath for accessibility
- Cooker Hood body (top & front) must be accessible for maintenance
- Side Springs should be flattened prior to fixing in place to aid easy removal
- Installation instructions provided with the appliance should be read in conjunction with these specifications

Notes on Specifications and Venting :

- Minimum distance above cooktops: Gas & Electric 650mm (check local regulations)
- Size of venting pipe : 150mm
- Ducting : Ezyvent venting accessories are recommended. For maximum performance keep length of ducting short and the number of elbows used to a minimum.
- Recirculating is an option if it is not possible to exhaust your rangehood outside. When using this option it is necessary to fit a CARBON FILTER. This will eliminate odours in the kitchen.

Model	Maximum Airflow Capacity (m^3/h)	Elec. Approval No.	Dimensions Width (mm)	Height (mm)	Depth (mm)	Electrical Rating Voltage	W	Amp
RH90	1000	Q97067	900	428	280 min 350 max	240	260	10

10
10 Year Parts & Labour Warranty*

For your nearest store call 13 13 08
www.kleenmaid.com.au

EXCLUSIVE TO
Kleenmaid
The best you can own.