Canopy Rangehood

Good looking and efficient – the perfect combination! The new series of designer rangehoods from Kleenmaid combine stunning good looks with outstanding design, to provide the perfect finishing touch to any kitchen.

Style: Island canopy

Colour: Stainless steel

Width: 1000mm

Operation: 3 speed single fan touch control

Lighting: 4 x 20w Halogen Lamps

Maximum Airflow Capacity: 700 m^3/h

*Technical Specifications and product sizes can be varied by Manufacturer without notice. Any cut-outs for appliances should only be by physical measurements. Drawings are not to scale. All information supplied is for general reference purposes only and is on the understanding that Kleenmaid Pty Ltd will not be liable for any loss, liability or damage whatsoever arising as a result of reliance of such information.

10

10 Year Parts & Labour Warranty*

For your nearest store call 13 13 08
www.kleenmaid.com.au

EXCLUSIVE TO

Kleenmaid
The best you can own.

Canopy Rangehood

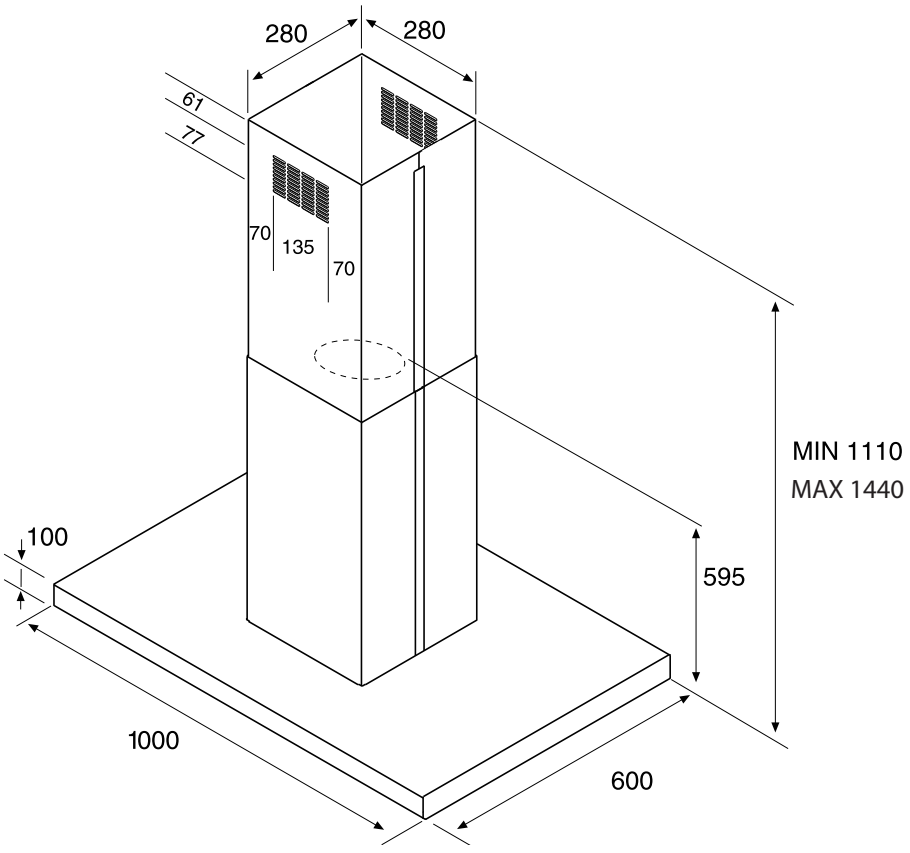

To ensure maximum performance from your Kleenmaid rangehood, external venting is recommended. If you have any questions or require further details please call Kleenmaid Customer Care on FREECALL 1300 652 100.

Minimum distance above cooktop: Electric cooktop – 650mm
Gas cooktop – 650mm
(Check Local Regulations)

Size of venting pipe: 150mm

Ducting: EzyVent venting supplies recommended.
For maximum performance keep length of ducting short and the number of elbows used to a minimum.

Recirculating: Is an option if it is not possible to exhaust your rangehood outside. When using this option it is necessary to fit a CARBON FILTER. This will eliminate odours in the kitchen.

Model	Maximum Airflow Capacity (m^3/h)	Elec. Approval No.	Dimensions Width (mm)	Height (mm)	Depth (mm)	Electrical Rating Voltage	W	Amp
FREESPOT100	700	Q96344	1000	1100 min 1440 max	600	240	255	1.1

10
10 Year Parts & Labour Warranty*

For your nearest store call 13 13 08
www.kleenmaid.com.au

EXCLUSIVE TO
Kleenmaid
The best you can own.