Dimensions and Specifications

Warming Drawer

Note: Image used is KWD140

The Kleenmaid range of warming drawers offer user friendly operation and flexibility. Whether you want to preheat dinnerware, defrost, keep dinner warm or prove yeast pastry, the Kleenmaid warming drawer is a fantastic appliance suitable for any kitchen.

Constructed from stainless steel, the new range of Kleenmaid warming drawers will blend harmoniously with other appliances in the kitchen, providing an aesthetically pleasing look.

Construction:	Stainless steel
Temperature range:	40 to 80 degrees (4 settings)
Operation:	Rotary control switch
Capacity	12 place dinner setting

10

10 Year Warranty*

For your nearest store call 13 13 08
www.kleenmaid.com.au

Kleenmaid
The best you can own.

Dimensions and Specifications

Warming Drawer

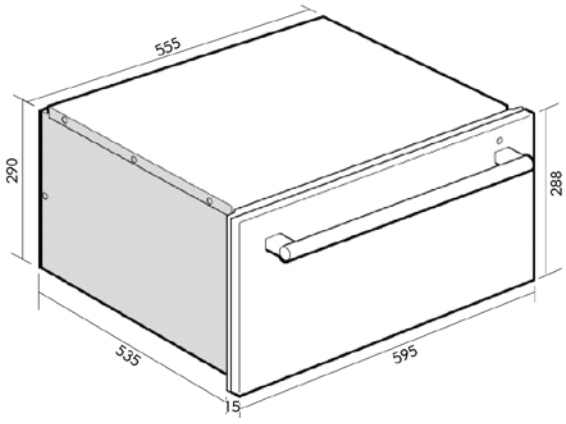

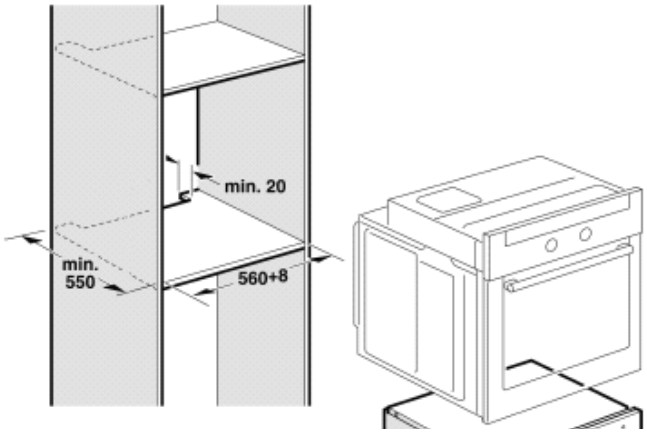

Note: Example Shown above also includes oven in configuration

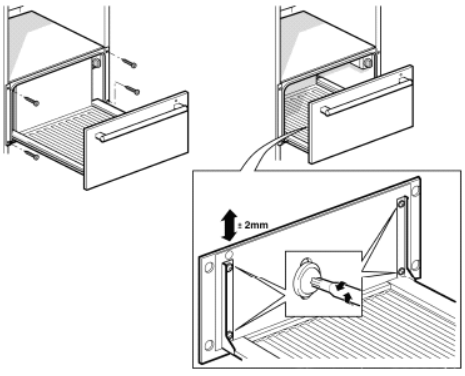

Electrical connection

The appliance is fitted with a plug, and must only be connected to a properly installed socket outlet with earthing contact. The installation of the socket or replacement of the connecting cable must only be carried out by a qualified electrician in accordance with current regulations. If the plug is no longer accessible subsequent to installation an all-pole disconnecting device must be present on the installation side with a contact gap of at lease 3mm,

• In accordance with heating testing standards, the appliance corresponds to Safety Class “Y”.

Fitted units

There must be no rear wall to fitted units which house appliances. There must be a gap of at least 20mm between the wall and the base of the unit, as well as between the wall and the rear wall of the unit above.

The ventilation slots and air intake points must not be covered.

To ensure that they remain uncovered, also observe the installation instructions for the appliance above.

Installing the appliance

Connect the appliance to the mains. Then align the appliance flush with the units and screw it in place.

Note:
Ensure that the connector lead does not become trapped or bent.

After installation, the connector lead must not be in contact with the back or the base of the appliance

Model	Electrical
KWD290	240V 810W 50Hz 10A GPO Plug: 3 pin AUS 150cm

*Technical Specifications and product sizes can be varied by Manufacturer without notice. Any cut-outs for appliances should only be by physical measurements. Drawings are not to scale. All information supplied is for general reference purposes only and is on the understanding that Kleenmaid Pty Ltd will not be liable for any loss, liability or damage whatsoever arising as a result of reliance of such information.

10
10 Year Warranty*

For your nearest store call 13 13 08
www.kleenmaid.com.au

Kleenmaid
The best you can own.