# Semi-Integrated Dishwasher

Kleenmaid's new range of dishwashers offer super silent and water efficient operation, for the way we live our lives today. Only the control panel is shown on the DW46I, as the dishwasher door is designed to be fitted with a panel to match the design of your kitchen. Combining many innovative features and programs, a Kleenmaid dishwasher is the perfect addition to your kitchen.

| | |
|---|---|
| Installation type: | Semi-Integrated |
| Finish: | Stainless steel |
| Cavity construction: | Stainless steel |
| Noise (db): | 46 |
| Wash programs: | Intensive<br>Normal<br>Auto program<br>Pre-rinse |
| Filtrations system: | 4 levels of filtration |
| Water rating (WELS): | 4 star |
| Energy rating: | 3.5 star |

*Technical Specifications and product sizes can be varied by Manufacturer without notice. Any cut-outs for appliances should only be by physical measurements. Drawings are not to scale. All information supplied is for general reference purposes only and is on the understanding that Kleenmaid Pty Ltd will not be liable for any loss, liability or damage whatsoever arising as a result of reliance of such information.

10

10 Year Warranty*

For your nearest store call 13 13 08
www.kleenmaid.com.au

Kleenmaid
The best you can own.

# Semi-Integrated Dishwasher

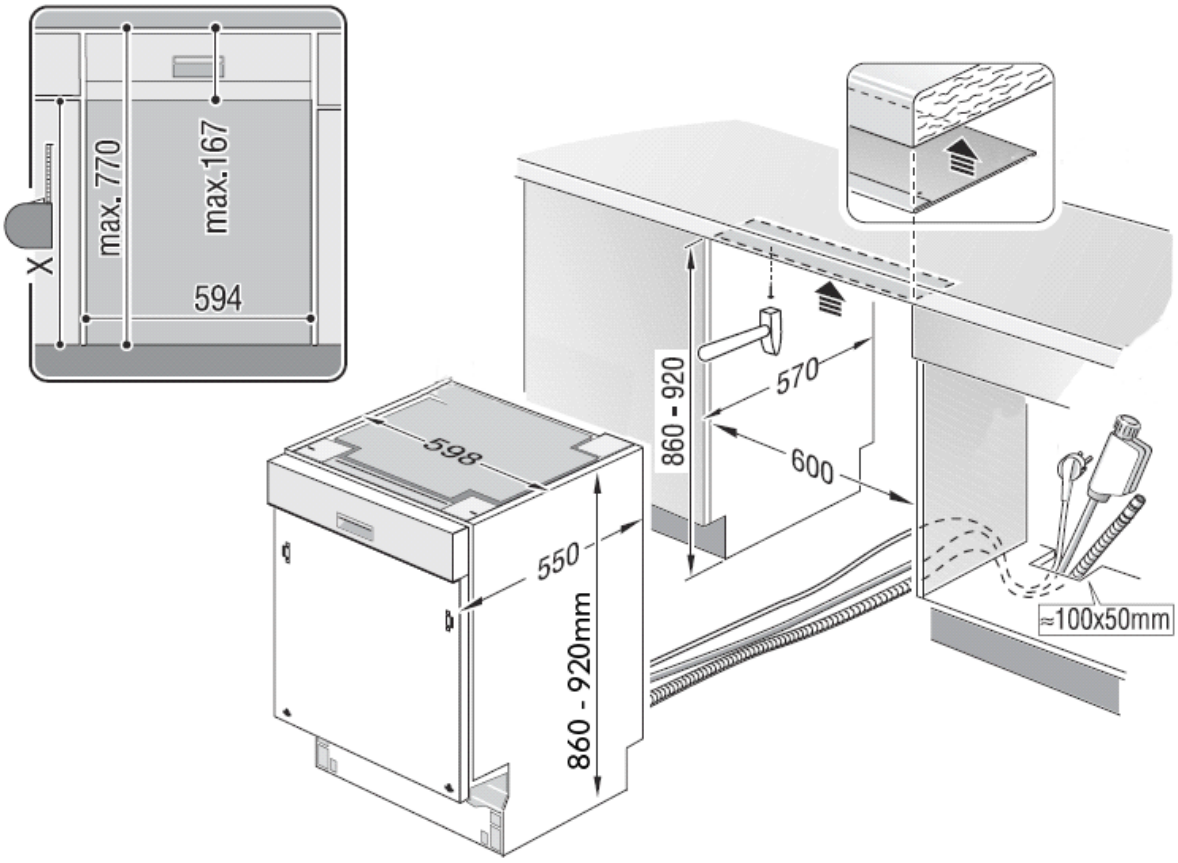


Note : Full installation diagrams & panel fitting instructions are included with appliance and available online @ www.kleenmaid.com.

**Water / Electrical Connection**

- Hot or Cold water connection up to 60°C
- Supply hose 140cm with anti-flood device fitted
- Drain hose 170cm
- Water Pressure: Min 50 kPa ; Max 1000 kPa
- Tap Connection: _ " BSP male tap
- Electrical mains cable 170cm
- Plug : 3 pin 10amp Aust.

**Inclusions**

- Steam Barrier Plate
- Large Item Spray Head
- Upper Level Cutlery Rack
- Glass Rack

**Accessories for Purchase**

- DK46X - Stainless Steel Semi Integrated Panel (H 580mm x W 590mm x D 20mm)

**Includes**

- Stainless Steel Kick Plate : 80mm x 598mm
  - Taller kick plate (115x598) available - Part No. BSHKP

Installation template provided with product. Copies available on request.

| Model | Electrical | Approval |
|---|---|---|
| DW46i | 240V 2400W 50Hz 10A GPO | Q070716 |

*Technical Specifications and product sizes can be varied by Manufacturer without notice. Any cut-outs for appliances should only be by physical measurements. Drawings are not to scale. All information supplied is for general reference purposes only and is on the understanding that Kleenmaid Pty Ltd will not be liable for any loss, liability or damage whatsoever arising as a result of reliance of such information.

10
10 Year Warranty*

For your nearest store call 13 13 08
www.kleenmaid.com.au

Kleenmaid
The best you can own.