Designer Series Espresso Machine

Installation Specifications

Imagine the best cup of coffee you have ever had. Now imagine waking up to that coffee every day for the rest of your life.

It's a luxury everyone wants but few people acquire, but that's what makes our Italian designed built-in coffee machine so special.

Releasing rich flavours and aroma, and producing the crema all cafés strive to achieve, the Kleenmaid coffee machine combines stunning good looks in a sleek stainless steel finish to bring new life to your kitchen. And since it features a self-contained water reservoir, there is no need for fiddly plumbing work.

Style: Built-in espresso machine

Colour: Full 304 grade stainless steel

External dimensions: 458 (H) X 595 (W) X 335 (D)

Pump pressure: 15 bar

Water reservoir capacity: 2.5 litres – no plumbing required

Coffee holder capacity: 0.35kg

Electrical: 240V, 10 amp plug

*Technical Specifications and product sizes can be varied by Manufacturer without notice. Any cut-outs for appliances should only be by physical measurements. Drawings are not to scale. All information supplied is for general reference purposes only and is on the understanding that Kleenmaid Pty Ltd will not be liable for any loss, liability or damage whatsoever arising as a result of reliance of such information.

10

10 Year Warranty*

For your nearest store call 13 13 08
www.kleenmaid.com.au

Kleenmaid
The best you can own.

Designer Series Espresso Machine

Installation Specifications

CM03X Side View

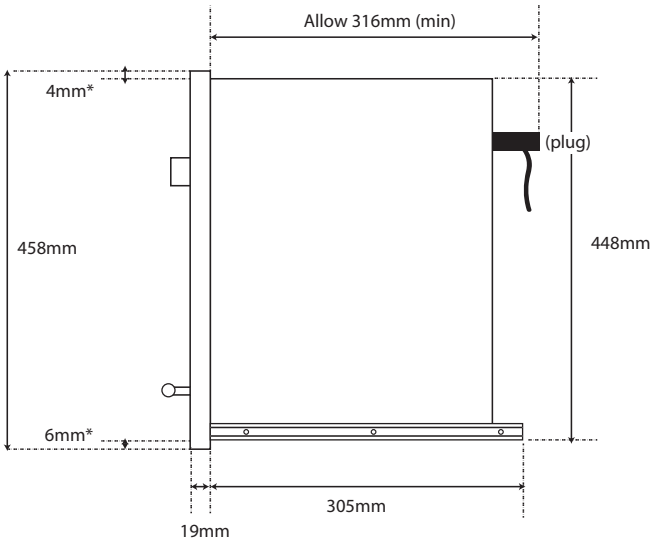

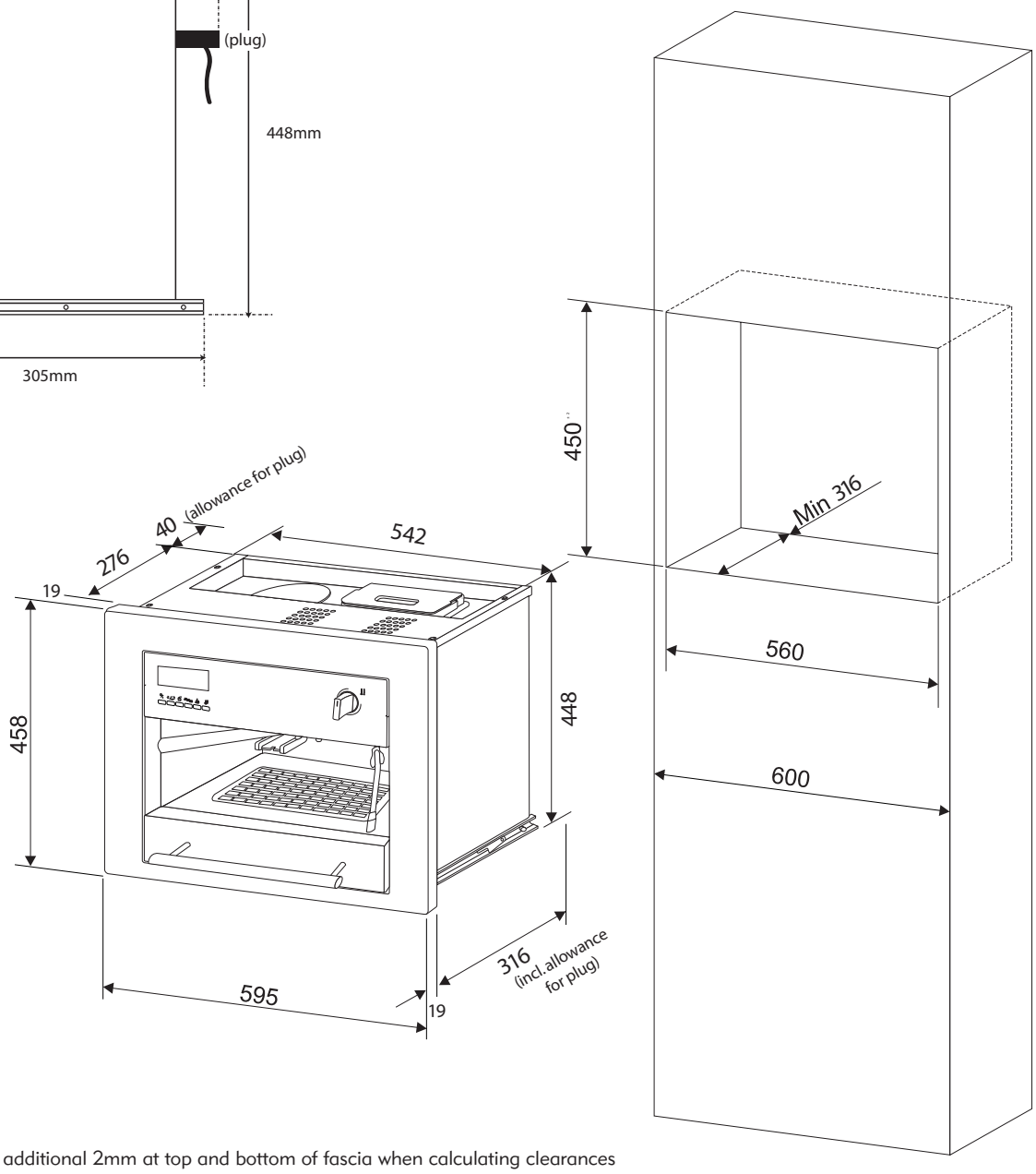

*Allow an additional 2mm at top and bottom of fascia when calculating clearances

Model	Tank Capacity (Litres)	Coffee Capacity (Kilograms)	Elec. Approval No.	Electrical Rating		
				Voltage	kW	Amp
CM03X	Approx. 2.5	Approx. 0.35	Q080286	240	1.75	10

10

10 Year Warranty*

For your nearest store call 13 13 08
www.kleenmaid.com.au

Kleenmaid
The best you can own.